14-Bit 105-MSPS Analog-to-Digital Converter

FEATURES

- **Controlled Baseline**
  - **One Assembly**
  - **Test Site**
  - **One Fabrication Site**
- **Extended Temperature Performance of –55°C to 125°C**
- **Enhanced Diminishing Manufacturing Sources (DMS) Support**
- **Enhanced Product-Change Notification**
- **Qualification Pedigree** (1)
- **14-Bit Resolution**
- **105-MSPS Maximum Sample Rate**
- **SNR = 74 dBc at 105 MSPS and 50-MHz IF**
- **SFDR = 93 dBc at 105 MSPS and 50-MHz IF**
- **2.2-V_{PP} Differential Input Range**
- **5-V Supply Operation**
- **3.3-V CMOS-Compatible Outputs**
- **1.9-W Total Power Dissipation**
- **2s-Complement Output Format**
- **On-Chip Input Analog Buffer, Track and Hold, and Reference Circuit**
- **52-Pin PowerPAD™ Thermally-Enhanced Thin Quad Flat Pack (HTQFP) With Exposed Heatsink**
- **Pin Compatible to the AD6644/45**
- **Military Temperature Range –55°C to 125°C**

(1) Component qualification in accordance with JEDEC and industry standards to ensure reliable operation over an extended temperature range. This includes, but is not limited to, Highly Accelerated Stress Test (HAST) or biased 85/85, temperature cycle, autoclave or unbiased HAST, electromigration, bond intermetallic life, and mold compound life. Such qualification testing should not be viewed as justifying use of this component beyond specified performance and environmental limits.

APPLICATIONS

- **Single and Multichannel Digital Receivers**
- **Base Station Infrastructure**
- **Instrumentation**
- **Video and Imaging Related Devices**

RELATED DEVICES

- **Clocking: CDC7005**
- **Amplifiers: OPA695, THS4509**

DESCRIPTION

The ADS5424 is a 14-bit 105-MSPS analog-to-digital converter (ADC) that operates from a 5-V supply, while providing 3.3-V CMOS-compatible digital outputs. The ADS5424 input buffer isolates the internal switching of the on-chip track and hold (T&H) from disturbing the signal source. An internal reference generator is also provided to further simplify the system design. The ADS5424 has outstanding low noise and linearity over input frequency. With only a 2.2-V_{PP} input range, simplifies the design of multicarrier applications, where the carriers are selected on the digital domain.

The ADS5424 is available in a 52-pin thermally-enhanced thin quad flat pack (HTQFP) with heatsink and is pin compatible to the AD6645. The ADS5424 is built on state-of-the-art Texas Instruments complementary bipolar process (BiCom3) and is specified over the full military temperature range (–55°C to 125°C).

Please be aware that an important notice concerning availability, standard warranty, and use in critical applications of Texas Instruments semiconductor products and disclaimers thereto appears at the end of this data sheet.

PowerPAD is a trademark of Texas Instruments.

PRODUCTION DATA information is current as of publication date. Products conform to specifications per the terms of the Texas Instruments standard warranty. Production processing does not necessarily include testing of all parameters.

Copyright © 2006, Texas Instruments Incorporated

FUNCTIONAL BLOCK DIAGRAM

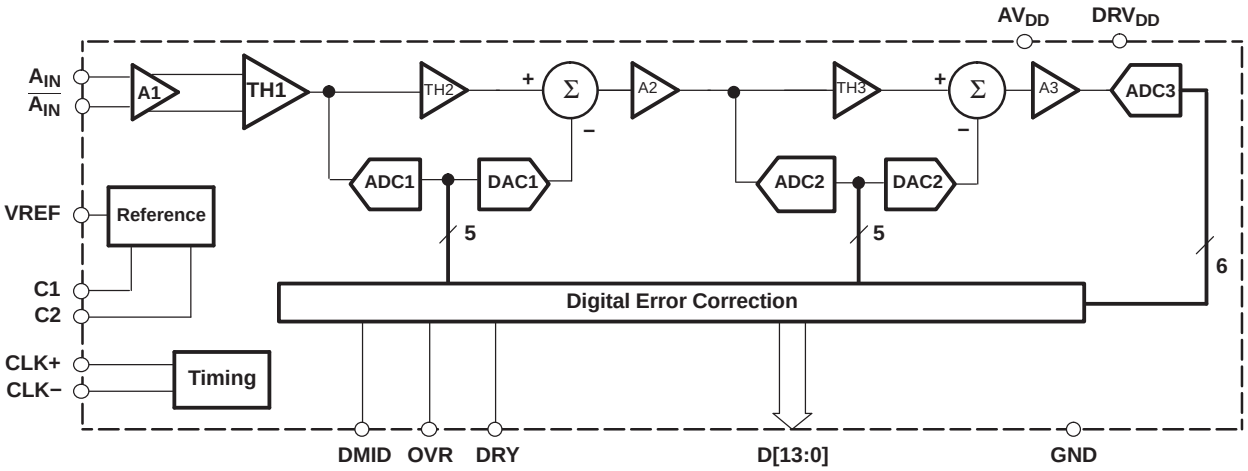

PACKAGE/ORDERING INFORMATION

PRODUCT	PACKAGE LEAD	PACKAGE DESIGNATOR	SPECIFIED TEMPERATURE RANGE	PACKAGE MARKING	ORDERING NUMBER	TRANSPORT MEDIA, QUANTITY
ADS5424	HTQFP-52 (1) PowerPAD™	PJY	–55°C to 125°C	ADS5424MEP	ADS5424MPJYREP	Tape and reel, 1000
					ADS5424MPJYEP	Tray, 160

(1) Thermal pad size: Octagonal 2,5 mm side

Absolute Maximum Ratings

over operating free-air temperature range (unless otherwise noted)(1)

		ADS5424	UNIT
Supply voltage	AV_{DD} to GND	6	V
	DRV_{DD} to GND	5	
Analog input to GND		–0.3 V to AV_{DD} + 0.3	V
Clock input to GND		–0.3 V to AV_{DD} + 0.3	V
CLK to $\overline{CLK}$		±2.5	V
Digital data output to GND		–0.3 V to DRV_{DD} + 0.3	V
Operating free-air temperature range		–55 to 125	°C
Maximum junction temperature		150	°C
Storage temperature range		–65 to 150	°C

(1) Stresses above these ratings may cause permanent damage. Exposure to absolute maximum conditions for extended periods may degrade device reliability. These are stress ratings only and functional operation of the device at these or any other conditions beyond those specified is not implied.

Thermal Characteristics(1)

PARAMETER	TEST CONDITIONS	TYP	UNIT
θ_{JA}	Soldered slug, no airflow	22.5	°C/W
	Soldered slug, 200-LFPM airflow	15.8	
	Unsoldered slug, no airflow	33.3	
	Unsoldered slug, 200-LFPM airflow	25.9	
θ_{JC}	Bottom of package (heatslug)	2	°C/W

(1) Using 25 thermal vias (5 × 5 array). See the Application Section.

Recommended Operating Conditions

		MIN	TYP	MAX	UNIT
Supply Voltage					
AV_{DD}	Analog supply voltage	4.75	5	5.25	V
DRV_{DD}	Output driver supply voltage	3	3.3	3.6	V
Analog Input					
	Differential input range		2.2		V_{PP}
V_{CM}	Input common mode voltage		2.4		V
Digital Output					
	Maximum output load		10		pF
Clock Input					
	ADCLK input sample rate (sine wave) $1/t_C$	30		105	MSPS
	Clock amplitude, sine wave, differential (1)		3		V_{PP}
	Clock duty cycle (2)		50%		
T_A	Operating free-air temperature	–55		125	°C

(1) See Figure 23 and Figure 24 for more information.
(2) See Figure 22 for more information.

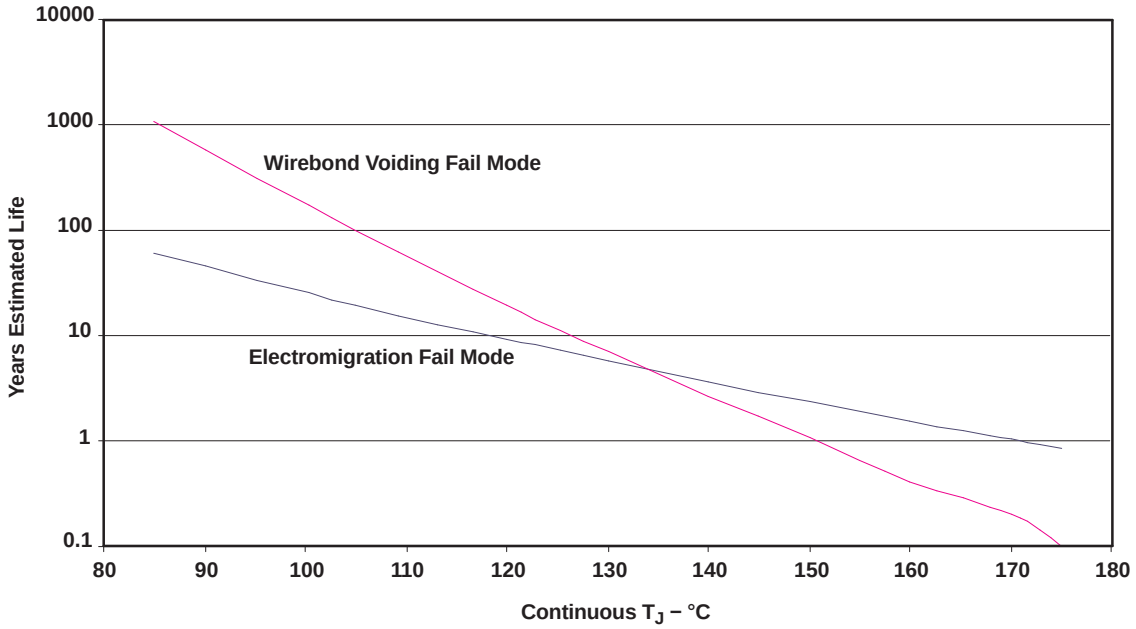

Figure 1. ADS5424MPJYEP Operating Life Derating Chart

Electrical Characteristics

over full operating temperature range (T_{MIN} = –55°C to T_{MAX} = 125°C), sampling rate = 105 MSPS, 50% clock duty cycle, AV_{DD} = 5 V, DRV_{DD} = 3.3 V, –1-dBFS differential input, and 3-V_{PP} differential sinusoidal clock (unless otherwise noted)

PARAMETER		TEST CONDITIONS		MIN	TYP	MAX	UNIT
Resolution					14		Bits
Analog Inputs							
	Differential input range				2.2		V_{PP}
	Differential input resistance	See Figure 33			1		kΩ
	Differential input capacitance	See Figure 33			1.5		pF
	Analog input bandwidth				570		MHz
Internal Reference Voltages							
V_{REF}	Reference voltage				2.4		V
Dynamic Accuracy							
	No missing codes				Tested		
DNL	Differential linearity error	f_{IN} = 10 MHz		–1	±0.5	1.5	LSB
INL	Integral linearity error	f_{IN} = 10 MHz			±1.5		LSB
	Offset error			–0.33	0	0.33	%FS
	Offset temperature coefficient				1.7		ppm/°C
	Gain error			–5	0.9	5	%FS
PSRR					1		mV/V
	Gain temperature coefficient				77		ppm/°C
Power Supply							
I_{AVDD}	Analog supply current	V_{IN} = full scale, f_{IN} = 70 MHz	F_S = 92.16 MSPS		355		mA
			F_S = 105 MSPS		355	410	
I_{DRVDD}	Output buffer supply current	V_{IN} = full scale, f_{IN} = 70 MHz	F_S = 92.16 MSPS		38		mA
			F_S = 105 MSPS		40	47	
	Power dissipation	Total power with 10-pF load on each digital output to ground, f_{IN} = 70 MHz	F_S = 92.16 MSPS		1.9		W
			F_S = 105 MSPS		1.9	2.2	
	Power-up time	F_S = 105 MSPS			20		ms
Dynamic AC Characteristics							
SNR	Signal-to-noise ratio	f_{IN} = 10 MHz	F_S = 92.16 MSPS		74.5		dBc
			F_S = 105 MSPS		74.4		
		f_{IN} = 30 MHz	F_S = 92.16 MSPS		74.4		
			F_S = 105 MSPS	73	74.3		
		f_{IN} = 50 MHz	F_S = 92.16 MSPS		74.2		
			F_S = 105 MSPS		74.2		
		f_{IN} = 70 MHz	F_S = 92.16 MSPS		74		
			F_S = 105 MSPS	72	74		
		f_{IN} = 100 MHz	F_S = 92.16 MSPS		73.5		
			F_S = 105 MSPS		73.5		
		f_{IN} = 170 MHz	F_S = 92.16 MSPS		72		
			F_S = 105 MSPS		72		
		f_{IN} = 230 MHz	F_S = 92.16 MSPS		71.5		
			F_S = 105 MSPS		71.5		

Electrical Characteristics (continued)

over full operating temperature range (T_{MIN} = –55°C to T_{MAX} = 125°C), sampling rate = 105 MSPS, 50% clock duty cycle, AV_{DD} = 5 V, DRV_{DD} = 3.3 V, –1-dBFS differential input, and 3-V_{PP} differential sinusoidal clock (unless otherwise noted)

PARAMETER		TEST CONDITIONS		MIN	TYP	MAX	UNIT
SFDR	Spurious-free dynamic range	f_{IN} = 10 MHz	F_S = 92.16 MSPS		94		dBc
			F_S = 105 MSPS		93		
		f_{IN} = 30 MHz	F_S = 92.16 MSPS		95		
			F_S = 105 MSPS	83	95		
		f_{IN} = 50 MHz	F_S = 92.16 MSPS		94		
			F_S = 105 MSPS		93		
		f_{IN} = 70 MHz	F_S = 92.16 MSPS		89		
			F_S = 105 MSPS		88		
		f_{IN} = 100 MHz	F_S = 92.16 MSPS		88		
			F_S = 105 MSPS		87		
		f_{IN} = 170 MHz	F_S = 92.16 MSPS		73		
			F_S = 105 MSPS		73		
		f_{IN} = 230 MHz	F_S = 92.16 MSPS		64		
			F_S = 105 MSPS		64		
SINAD	Signal-to-noise + distortion	f_{IN} = 10 MHz	F_S = 92.16 MSPS		74.4		dBc
			F_S = 105 MSPS		74.3		
		f_{IN} = 30 MHz	F_S = 92.16 MSPS		74.3		
			F_S = 105 MSPS	71.7	74.3		
		f_{IN} = 50 MHz	F_S = 92.16 MSPS		74.1		
			F_S = 105 MSPS		74		
		f_{IN} = 70 MHz	F_S = 92.16 MSPS		74		
			F_S = 105 MSPS		73.9		
		f_{IN} = 100 MHz	F_S = 92.16 MSPS		73.3		
			F_S = 105 MSPS		73.3		
		f_{IN} = 170 MHz	F_S = 92.16 MSPS		69.3		
			F_S = 105 MSPS		69.1		
		f_{IN} = 230 MHz	F_S = 92.16 MSPS		63.4		
			F_S = 105 MSPS		63.4		
HD2	Second harmonic	f_{IN} = 10 MHz			100		dBc
		f_{IN} = 30 MHz			105		
		f_{IN} = 50 MHz			98		
		f_{IN} = 70 MHz			98		
		f_{IN} = 100 MHz			98		
		f_{IN} = 170 MHz			98		
		f_{IN} = 230 MHz			96		
HD3	Third harmonic	f_{IN} = 10 MHz			93		dBc
		f_{IN} = 30 MHz			95		
		f_{IN} = 50 MHz			93		
		f_{IN} = 100 MHz			87		
		f_{IN} = 170 MHz			73		
		f_{IN} = 230 MHz			64		

Electrical Characteristics (continued)

over full operating temperature range (T_{MIN} = –55°C to T_{MAX} = 125°C), sampling rate = 105 MSPS, 50% clock duty cycle, AV_{DD} = 5 V, DRV_{DD} = 3.3 V, –1-dBFS differential input, and 3-V_{PP} differential sinusoidal clock (unless otherwise noted)

PARAMETER	TEST CONDITIONS	MIN	TYP	MAX	UNIT
Worst harmonic/spur (other than HD2 and HD3)	f_{IN} = 10 MHz		93		dBc
	f_{IN} = 30 MHz		95		
	f_{IN} = 50 MHz		93		
	f_{IN} = 70 MHz		88		
	f_{IN} = 100 MHz		88		
	f_{IN} = 170 MHz		88		
	f_{IN} = 230 MHz		88		
RMS idle channel noise	Input pins tied together		0.9		LSB

Digital Characteristics

over full operating temperature range (T_{MIN} = –55°C to T_{MAX} = 125°C), AV_{DD} = 5 V, DRV_{DD} = 3.3 V (unless otherwise noted)

PARAMETER	TEST CONDITIONS	MIN	TYP	MAX	UNIT
Digital Outputs					
Low-level output voltage	C_{LOAD} = 10 pF (1)		0.1	0.6	V
High-level output voltage	C_{LOAD} = 10 pF (1)	2.6	3.2		V
Output capacitance			3		pF
DMID			$DRV_{DD}/2$		V

(1) Equivalent capacitance to ground of (load + parasitics of transmission lines)

Timing Characteristics[1]

over full operating temperature range, AV_{DD} = 5 V, DRV_{DD} = 3.3 V, sampling rate = 105 MSPS

PARAMETER	DESCRIPTION	MIN	TYP	MAX	UNIT
Aperture Time					
t_A	Aperture delay		500		ps
t_J	Clock slope independent aperture uncertainty (jitter)		150		fs
k_J	Clock slope dependent jitter factor		50		µV
Clock Input					
t_{CLK}	Clock period		9.5		ns
t_{CLKH}[2]	Clock pulse width high		4.75		ns
t_{CLKL}[2]	Clock pulse width low		4.75		ns
Clock to DataReady (DRY)					
t_{DR}	Clock rising 50% to DRY falling 50%	2.8	3.9	4.7	ns
t_{C_DR}	Clock rising 50% to DRY rising 50%		$t_{DR} + t_{CLKH}$		ns
$t_{C_DR_50\%}$	Clock rising 50% to DRY rising 50% with 50% duty cycle clock	7.6	8.7	9.5	ns
Clock to DATA, OVR[3]					
t_r	Data V_{OL} to data V_{OH} (rise time)		2		ns
t_f	Data V_{OH} to data V_{OL} (fall time)		2		ns
L	Latency		3		Cycles
$t_{SU(C)}$	Valid DATA[4] to clock 50% with 50% duty cycle clock (setup time)	1.8	3.4		ns
$t_{H(C)}$	Clock 50% to invalid DATA[4] (hold time)	2.6	3.6		ns
DataReady (DRY)/DATA, OVR[3]					
$t_{su(DR)_50\%}$	Valid DATA[4] to DRY 50% with 50% duty cycle clock (setup time)	1.8	2.6		ns
$t_{h(DR)_50\%}$	DRY 50% to invalid DATA[4] with 50% duty cycle clock (hold time)	3.9	4.4		ns

(1) All values are obtained from design and characterization and are not production tested.
(2) See Figure 22 for more information.
(3) Data is updated with clock rising edge or DRY falling edge.
(4) See V_{OH} and V_{OL} levels.

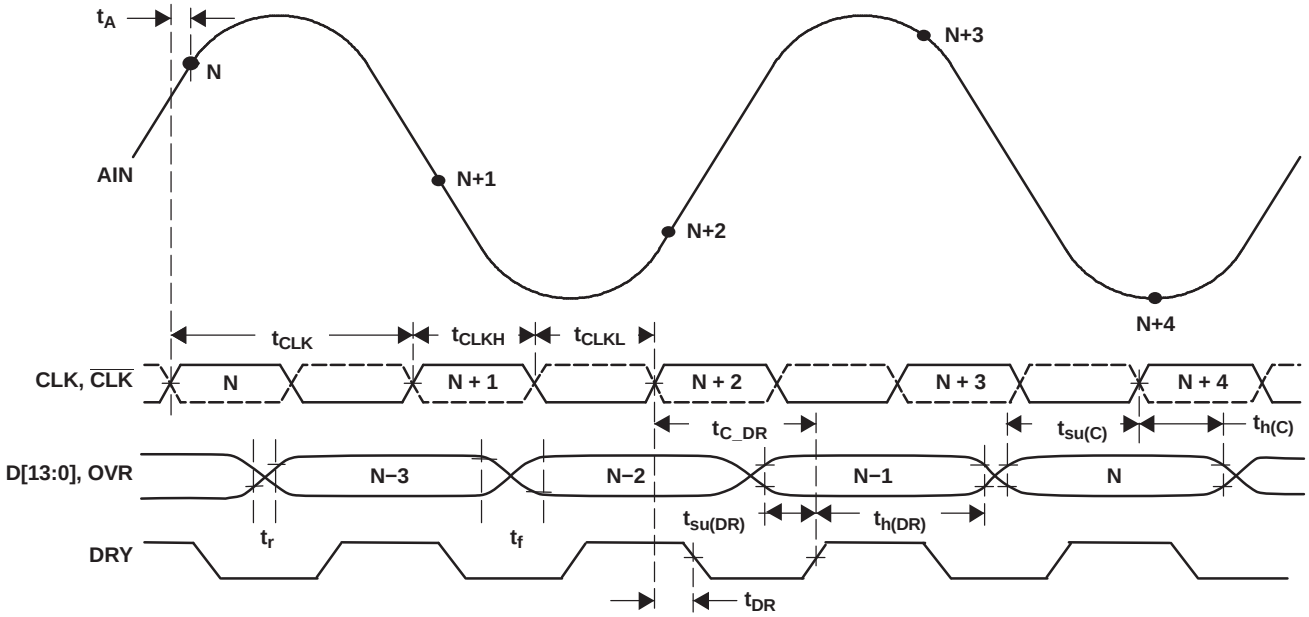

Figure 2. Timing Diagram

PIN CONFIGURATION

PJY PACKAGE
(TOP VIEW)

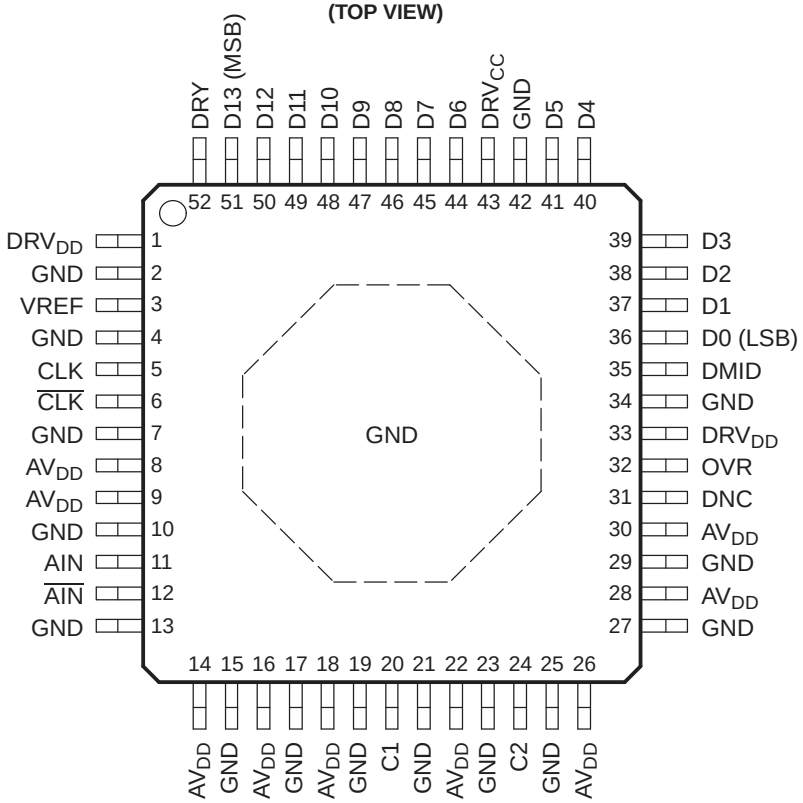

PIN ASSIGNMENTS

TERMINAL		DESCRIPTION
NAME	NO.	
DRV_{DD}	1, 33, 43	3.3 V power supply, digital output stage only
GND	2, 4, 7, 10, 13, 15, 17, 19, 21, 23, 25, 27, 29, 34, 42	Ground
VREF	3	2.4 V reference. Bypass to ground with a 0.1-µF microwave chip capacitor.
CLK	5	Clock input. Conversion initiated on rising edge
$\overline{CLK}$	6	Complement of CLK, differential input
AV_{DD}	8, 9, 14, 16, 18, 22, 26, 28, 30	5-V analog power supply
AIN	11	Analog input
$\overline{AIN}$	12	Complement of AIN, differential analog input
C1	20	Internal voltage reference. Bypass to ground with a 0.1-µF chip capacitor.
C2	24	Internal voltage reference. Bypass to ground with a 0.1-µF chip capacitor.
DNC	31	Do not connect
OVR	32	Overrange bit. A logic-level high indicates the analog input exceeds full scale.
DMID	35	Output data voltage midpoint. Approximately equal to $(DV_{CC})/2$
D0 (LSB)	36	Digital output bit (least significant bit); twos complement
D1–D5, D6–D12	37–41, 44–50	Digital output bits in twos complement
D13 (MSB)	51	Digital output bit (most significant bit); twos complement
DRY	52	Data ready output

DEFINITION OF SPECIFICATIONS

Analog Bandwidth

The analog input frequency at which the power of the fundamental is reduced by 3 dB, with respect to the low frequency value

Aperture Delay

The delay in time between the rising edge of the input sampling clock and the actual time at which the sampling occurs

Aperture Uncertainty (Jitter)

The sample-to-sample variation in aperture delay

Clock Pulse Width/Duty Cycle

The duty cycle of a clock signal is the ratio of the time the clock signal remains at a logic high (clock pulse width) to the period of the clock signal. Duty cycle is typically expressed as a percentage. A perfect differential sine-wave clock results in a 50% duty cycle.

Maximum Conversion Rate

The maximum sampling rate at which certified operation is given. All parametric testing is performed at this sampling rate, unless otherwise noted.

Minimum Conversion Rate

The minimum sampling rate at which the ADC functions

Differential Nonlinearity (DNL)

An ideal ADC exhibits code transitions at analog input values spaced exactly one LSB apart. The DNL is the deviation of any single step from this ideal value, measured in units of LSB.

Integral Nonlinearity (INL)

The INL is the deviation of the ADC transfer function from a best fit line determined by a least squares curve fit of that transfer function, measured in units of LSB.

Gain Error

The gain error is the deviation of the ADC actual input full-scale range from its ideal value. The gain error is given as a percentage of the ideal input full-scale range.

Offset Error

The offset error is the difference, given in number of LSBs, between the ADC actual value average idle channel output code and the ideal average idle channel output code. This quantity is often mapped into mV

Power-Supply Rejection Ration (PSRR)

The maximum change in offset voltage divided by the total change in supply voltage, in units of mV/V

Power-Up Time

The difference in time from the point where the supplies are stable at ±5% of the final value, to the time the ac test is past

Signal-to-Noise Ratio (SNR)

SNR is the ratio of the power of the fundamental (P_S) to the noise floor power (P_N), excluding the power at dc and the first five harmonics.

$$SNR = 10Log_{10}\frac{P_S}{P_N}$$

SNR is either given in units of dBc (dB to carrier) when the absolute power of the fundamental is used as the reference, or dBFS (dB to full scale) when the power of the fundamental is extrapolated to the converter's full-scale range.

DEFINITION OF SPECIFICATIONS (continued)

Signal-to-Noise and Distortion (SINAD)

SINAD is the ratio of the power of the fundamental (P_S) to the power of all the other spectral components including noise (P_N) and distortion (P_D), but excluding dc.

$$SINAD = 10Log_{10}\frac{P_S}{P_N + P_D}$$

SINAD is either given in units of dBc (dB to carrier), when the absolute power of the fundamental is used as the reference, or dBFS (dB to full scale) when the power of the fundamental is extrapolated to the converter's full-scale range.

Spurious-Free Dynamic Range (SFDR)

The ratio of the power of the fundamental to the highest other spectral component (either spur or harmonic). SFDR is typically given in units of dBc (dB to carrier).

Temperature Drift

The temperature drift coefficient (with respect to gain error and offset error) specifies the change per degree Celsius of the parameter from T_{MIN} or T_{MAX}. It is computed as the maximum variation of that parameter over the whole temperature range divided by $T_{MAX} – T_{MIN}$.

Total Harmonic Distortion (THD)

THD is the ratio of the fundamental power (P_S) to the power of the first five harmonics (P_D).

$$THD = 10Log_{10}\frac{P_S}{P_D}$$

THD is typically given in units of dBc (dB to carrier).

Two-Tone Intermodulation Distortion

IMD3 is the ratio of the power of the fundamental (at frequencies f_1, f_2) to the power of the worst spectral component at either frequency ($2f_1 – f_2$ or $2f_2 – f_1$). IMD3 is either given in units of dBc (dB to carrier) when the absolute power of the fundamental is used as the reference, or dBFS (dB to full scale) when it is referred to the full-scale range.

TYPICAL CHARACTERISTICS

Typical values are at T_A = 25°C, AV_{DD} = 5 V, DRV_{DD} = 3.3-V, differential input amplitude = –1 dBFS, sampling rate = 105 MSPS, 3-V_{PP} sinusoidal clock, 50% duty cycle, 16k FFT points (unless otherwise noted).

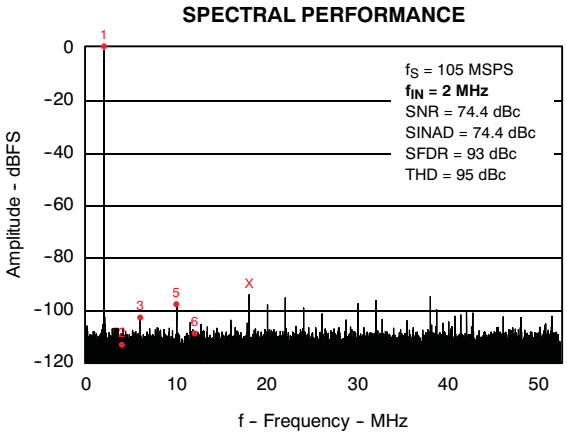

Figure 3.

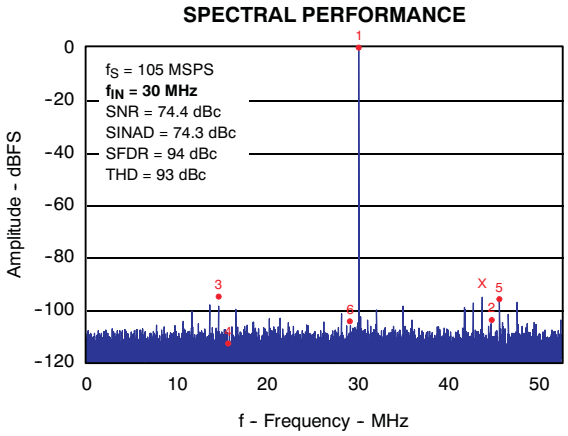

Figure 4.

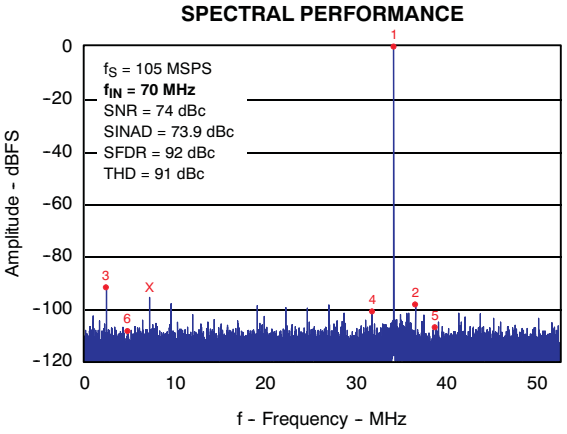

Figure 5.

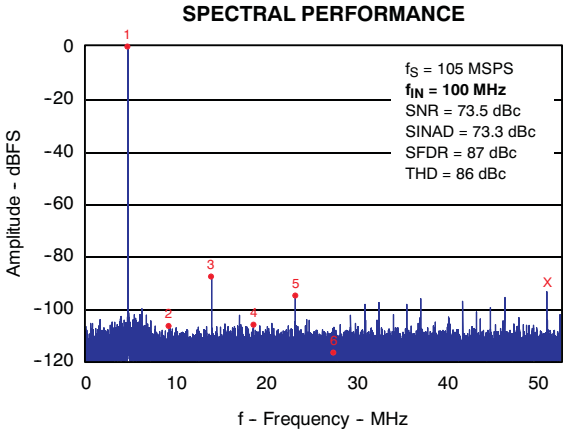

Figure 6.

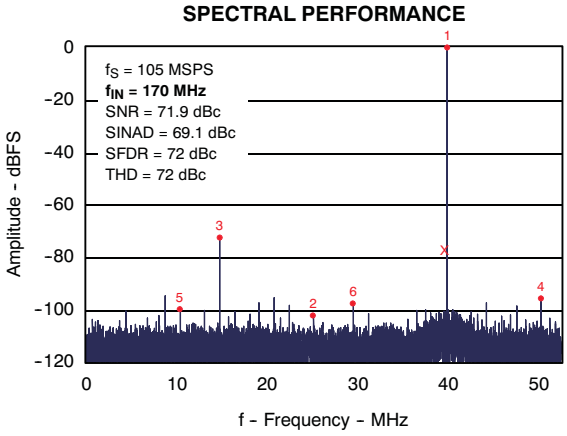

Figure 7.

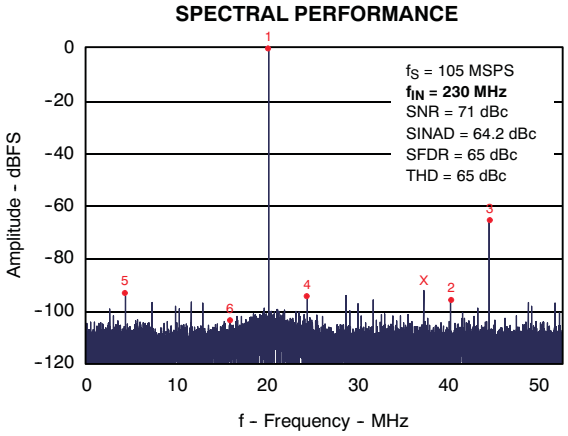

Figure 8.

TYPICAL CHARACTERISTICS (continued)

Typical values are at T_A = 25°C, AV_{DD} = 5 V, DRV_{DD} = 3.3-V, differential input amplitude = –1 dBFS, sampling rate = 105 MSPS, 3-V_{PP} sinusoidal clock, 50% duty cycle, 16k FFT points (unless otherwise noted).

SPECTRAL PERFORMANCE

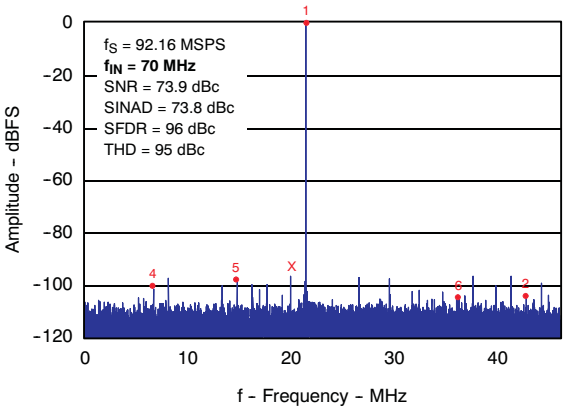

Figure 9.

SPECTRAL PERFORMANCE

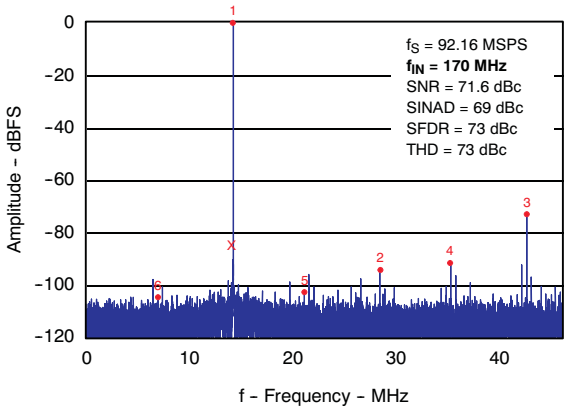

Figure 10.

SPECTRAL PERFORMANCE

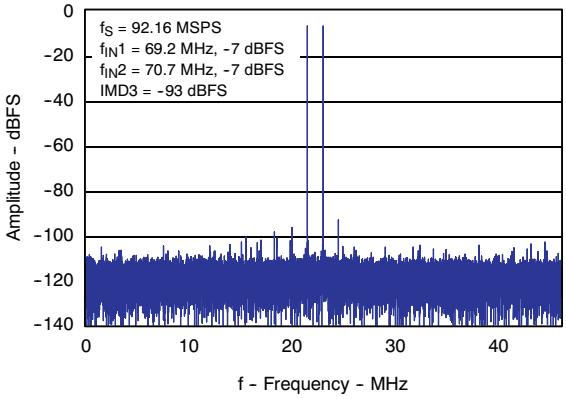

Figure 11.

SPECTRAL PERFORMANCE

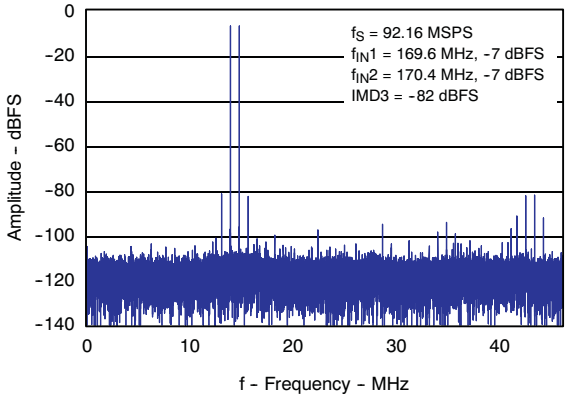

Figure 12.

WCDMA CARRIER

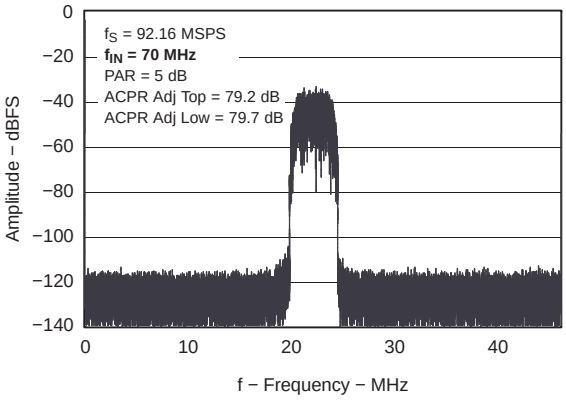

Figure 13.

WCDMA CARRIER

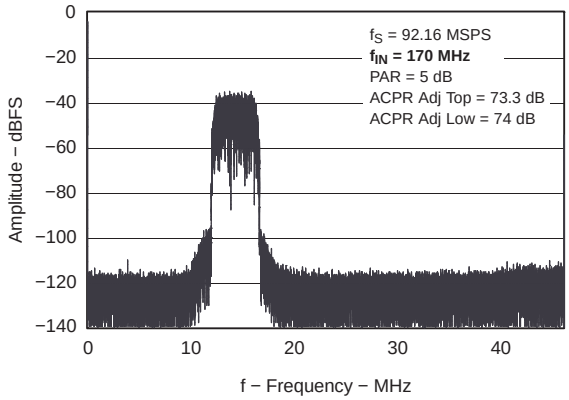

Figure 14.

TYPICAL CHARACTERISTICS (continued)

Typical values are at T_A = 25°C, AV_{DD} = 5 V, DRV_{DD} = 3.3-V, differential input amplitude = –1 dBFS, sampling rate = 105 MSPS, 3-V_{PP} sinusoidal clock, 50% duty cycle, 16k FFT points (unless otherwise noted).

AC PERFORMANCE vs INPUT AMPLITUDE

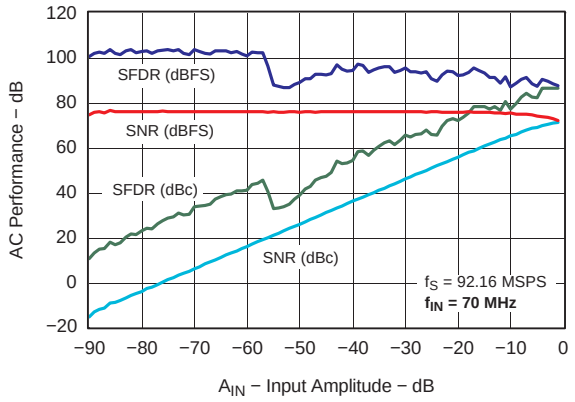

Figure 15.

AC PERFORMANCE vs INPUT AMPLITUDE

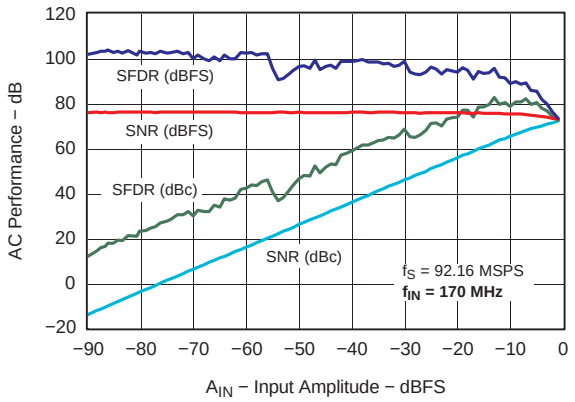

Figure 16.

TWO-TONE SPURIOUS-FREE DYNAMIC RANGE vs INPUT AMPLITUDE

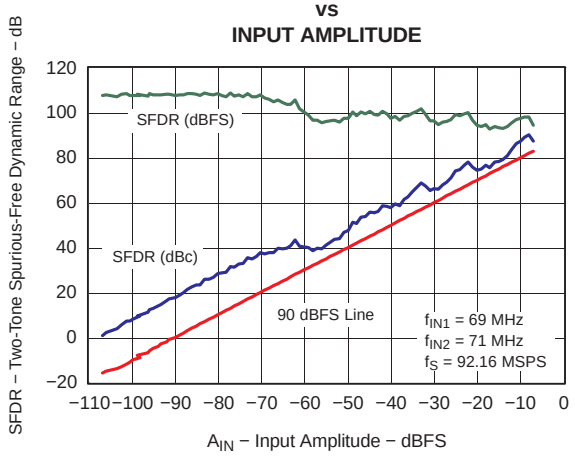

Figure 17.

NOISE HISTOGRAM WITH INPUTS SHORTED

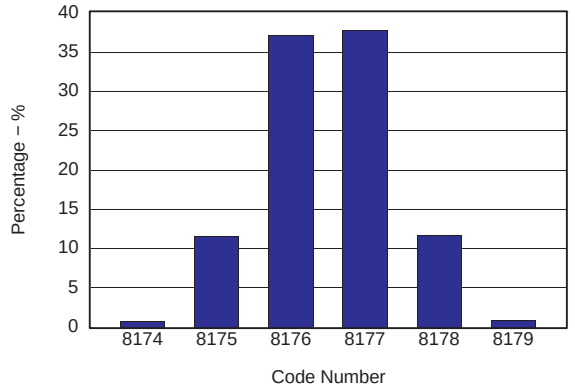

Figure 18.

TYPICAL CHARACTERISTICS (continued)

Typical values are at T_A = 25°C, AV_{DD} = 5 V, DRV_{DD} = 3.3-V, differential input amplitude = –1 dBFS, sampling rate = 105 MSPS, 3-V_{PP} sinusoidal clock, 50% duty cycle, 16k FFT points (unless otherwise noted).

TOTAL POWER vs SAMPLING FREQUENCY

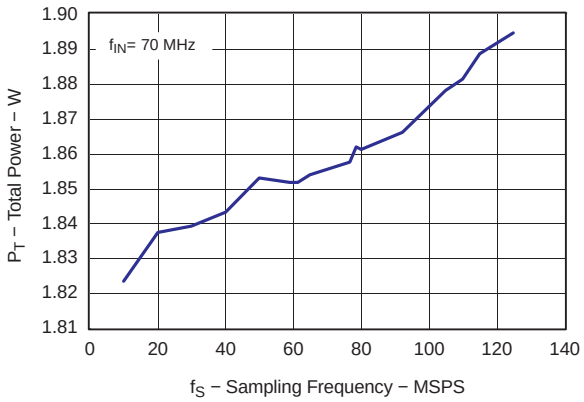

Figure 19.

INPUT BANDWIDTH

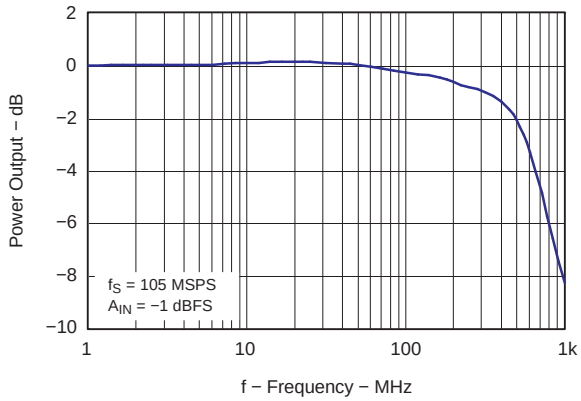

Figure 20.

AC PERFORMANCE vs CLOCK COMMON MODE

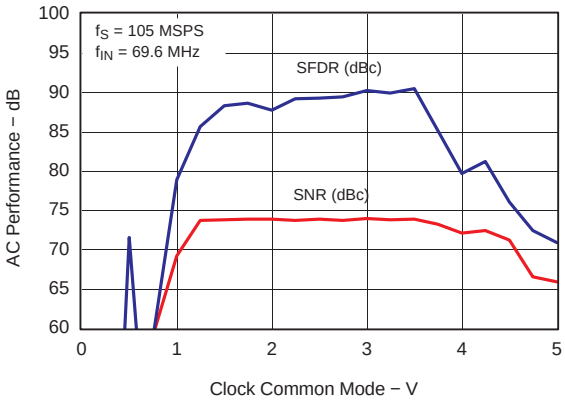

Figure 21.

SPURIOUS-FREE DYNAMIC RANGE vs DUTY CYCLE

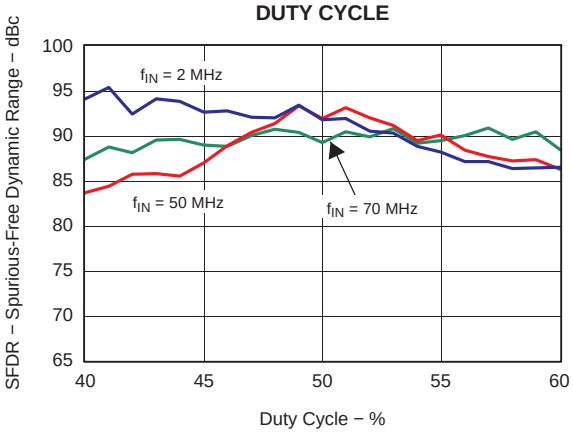

Figure 22.

TYPICAL CHARACTERISTICS (continued)

Typical values are at T_A = 25°C, AV_{DD} = 5 V, DRV_{DD} = 3.3-V, differential input amplitude = –1 dBFS, sampling rate = 105 MSPS, 3-V_{PP} sinusoidal clock, 50% duty cycle, 16k FFT points (unless otherwise noted).

AC PERFORMANCE vs CLOCK LEVEL

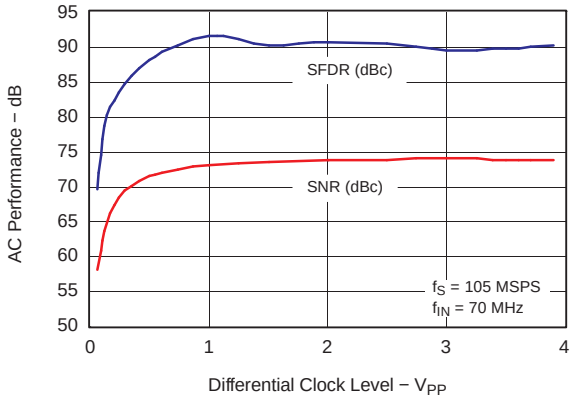

Figure 23.

AC PERFORMANCE vs CLOCK LEVEL

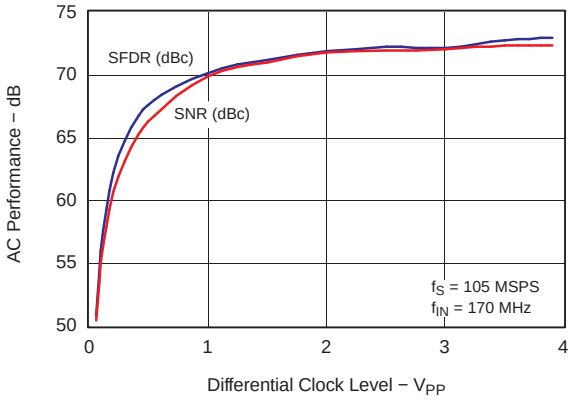

Figure 24.

SPURIOUS-FREE DYNAMIC RANGE vs SUPPLY VOLTAGE AND AMBIENT TEMPERATURE

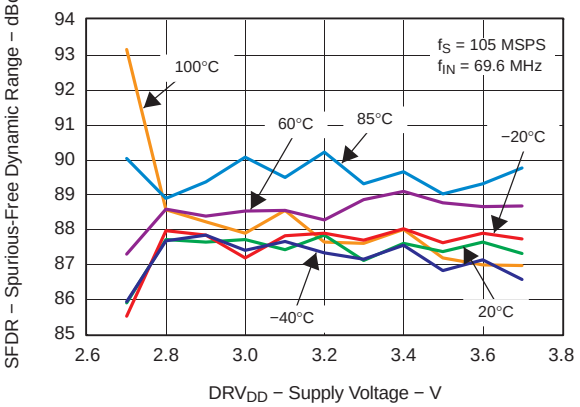

Figure 25.

SIGNAL-TO-NOISE RATIO vs SUPPLY VOLTAGE AND AMBIENT TEMPERATURE

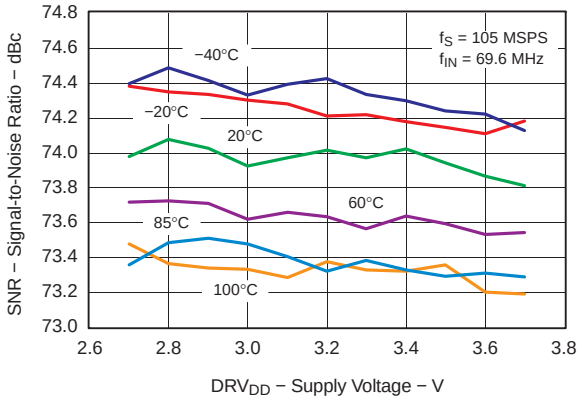

Figure 26.

SPURIOUS-FREE DYNAMIC RANGE vs SUPPLY VOLTAGE AND AMBIENT TEMPERATURE

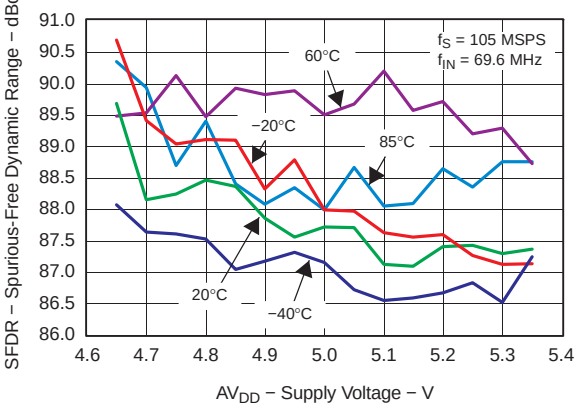

Figure 27.

SIGNAL-TO-NOISE RATIO vs SUPPLY VOLTAGE AND AMBIENT TEMPERATURE

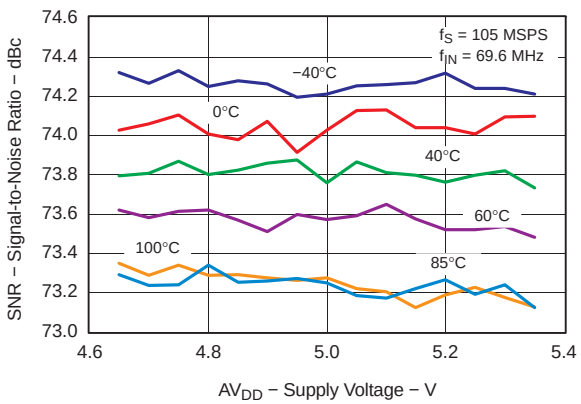

Figure 28.

TYPICAL CHARACTERISTICS (continued)

Typical values are at T_A = 25°C, AV_{DD} = 5 V, DRV_{DD} = 3.3-V, differential input amplitude = –1 dBFS, sampling rate = 105 MSPS, 3-V_{PP} sinusoidal clock, 50% duty cycle, 16k FFT points (unless otherwise noted).

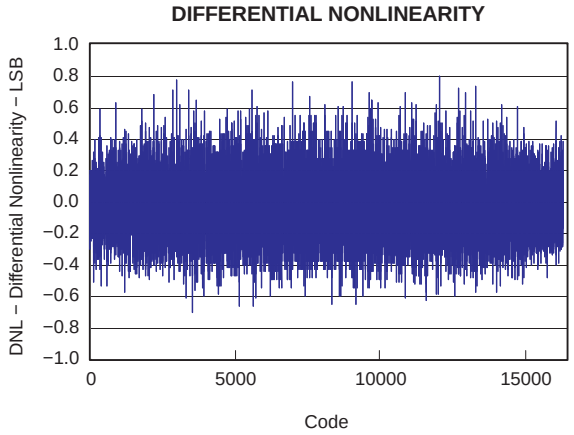

Figure 29.

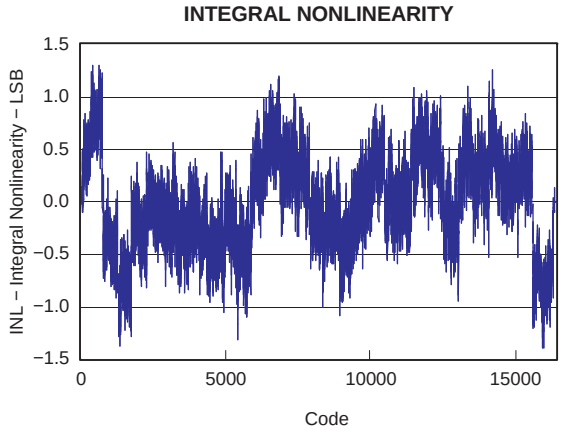

Figure 30.

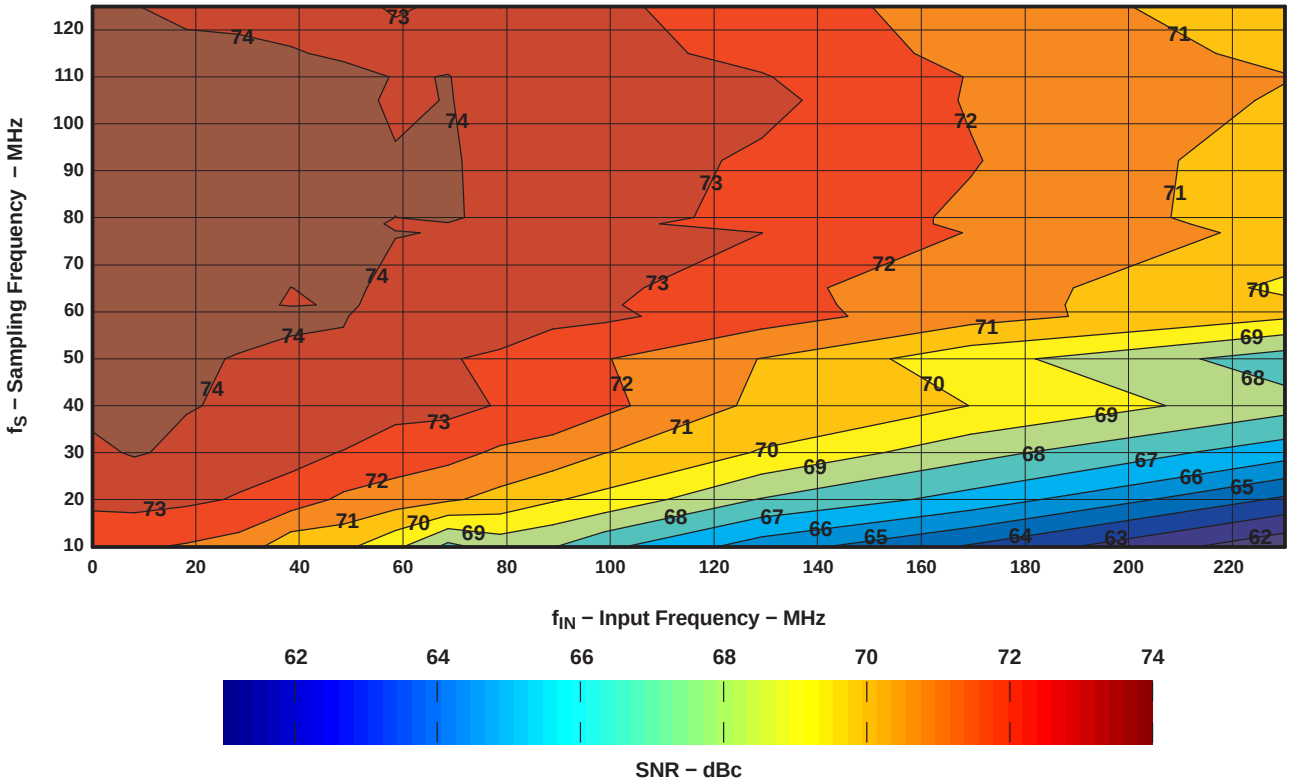

Figure 31.

TYPICAL CHARACTERISTICS (continued)

Typical values are at T_A = 25°C, AV_{DD} = 5 V, DRV_{DD} = 3.3-V, differential input amplitude = –1 dBFS, sampling rate = 105 MSPS, 3-V_{PP} sinusoidal clock, 50% duty cycle, 16k FFT points (unless otherwise noted).

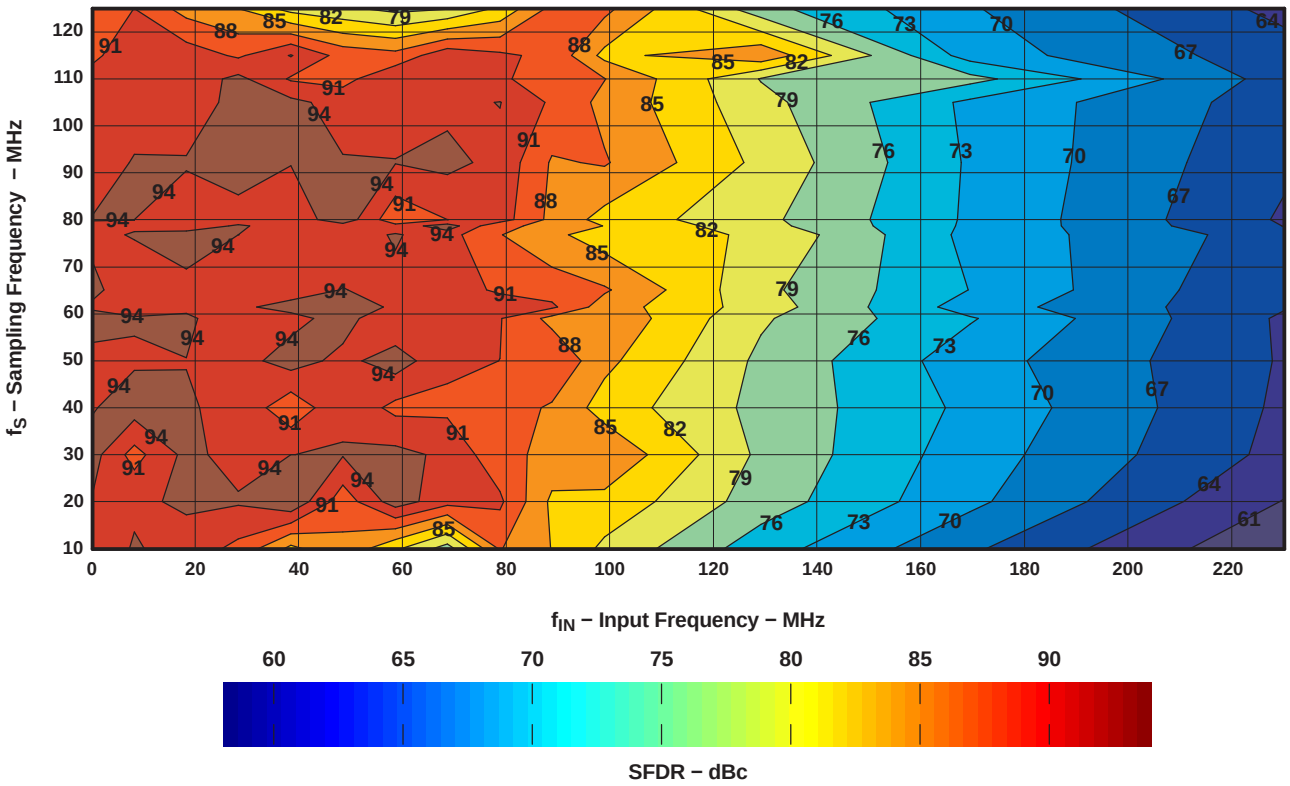

Figure 32.

EQUIVALENT CIRCUITS

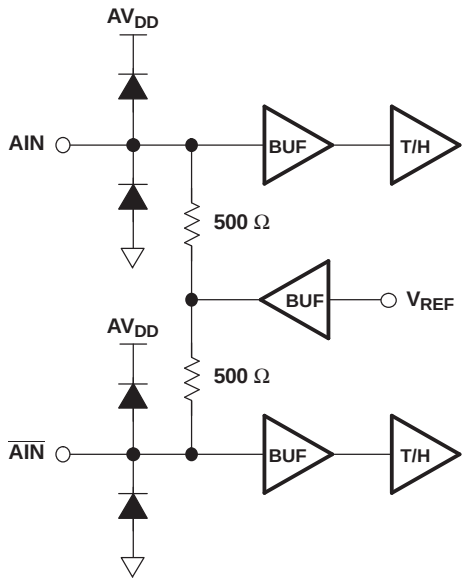

Figure 33. Analog Input

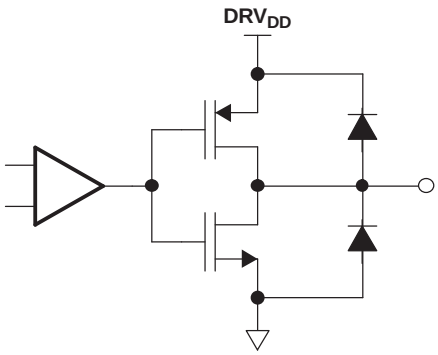

Figure 34. Digital Output

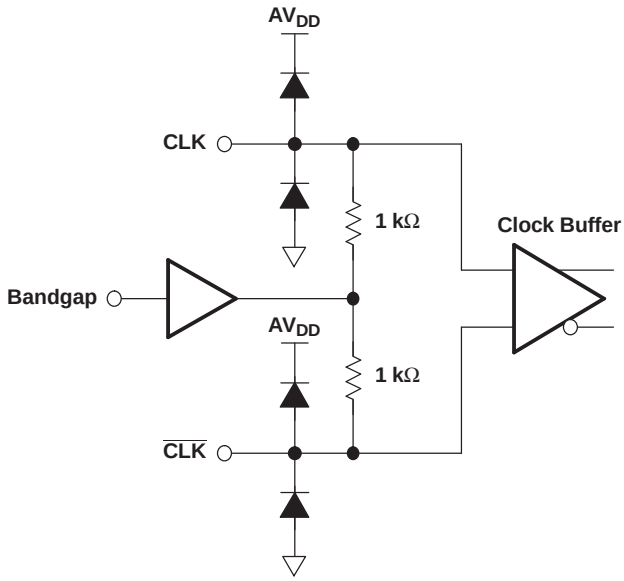

Figure 35. Clock Input

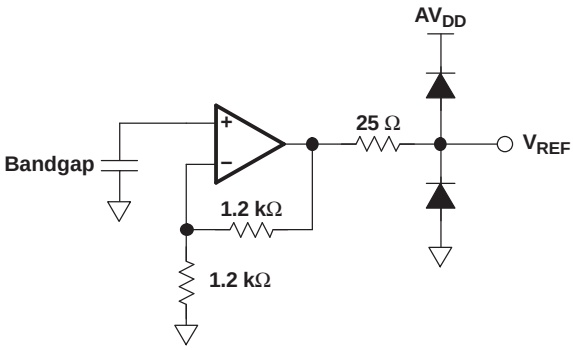

Figure 36. Reference

EQUIVALENT CIRCUITS (continued)

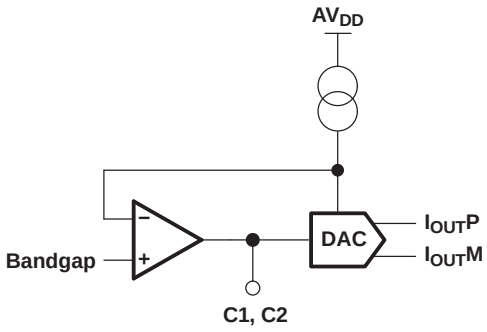

Figure 37. Decoupling Pin

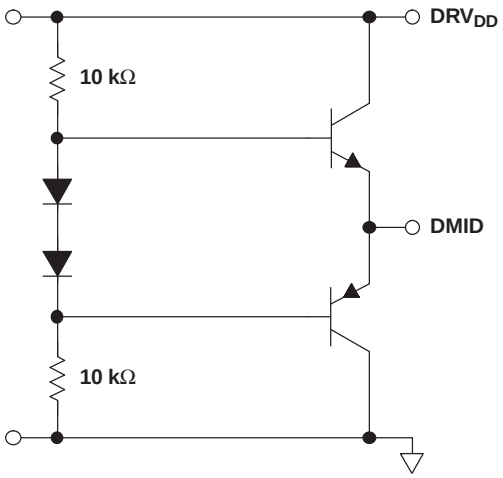

Figure 38. DMID Generation

APPLICATION INFORMATION

Theory of Operation

The ADS5424 is a 14-bit, 105-MSPS, monolithic pipeline ADC. Its bipolar analog core operates from a 5-V supply, while the output uses 3.3-V supply for compatibility with the CMOS family. The conversion process is initiated by the rising edge of the external input clock. At that instant, the differential input signal is captured by the input track and hold (T&H) and the input sample is sequentially converted by a series of small resolution stages, with the outputs combined in a digital correction logic block. Both the rising and the falling clock edges are used to propagate the sample through the pipeline every half clock cycle. This process results in a data latency of three clock cycles, after which the output data is available as a 14-bit parallel word, coded in binary twos-complement format.

Input Configuration

The analog input for the ADS5424 (see Figure 33) consists of an analog differential buffer followed by a bipolar T&H. The analog buffer isolates the source driving the input of the ADC from any internal switching. The input common mode is set internally through a 500-Ω resistor connected from 2.4 V to each of the inputs. This results in a differential input impedance of 1 kΩ.

For a full-scale differential input, each of the differential lines of the input signal (pins 11 and 12) swings symmetrically between 2.4 + 0.55 V and 2.4 – 0.55 V. This means that each input is driven with a signal of up to 2.4 ± 0.55 V, so that each input has a maximum signal swing of 1.1 V_{PP} for a total differential input signal swing of 2.2 V_{PP}. The maximum swing is determined by the internal reference voltage generator eliminating any external circuitry for this purpose.

The ADS5424 obtains optimum performance when the analog inputs are driven differentially. The circuit in Figure 39 shows one possible configuration using an RF transformer with termination either on the primary or on the secondary of the transformer. If voltage gain is required, a step-up transformer can be used. For higher gains that would require impractical higher turn ratios on the transformer, a single-ended amplifier driving the transformer can be used (see Figure 40). Another circuit optimized for performance is the one shown in Figure 41, using the THS4304 or the OPA695. TI has shown excellent performance on this configuration up to 10-dB gain with the THS4304, and at 14-dB gain with the OPA695. For the best performance, they need to be configured differentially after the transformer (as shown) or in inverting mode for the OPA695 (see SBAA113); otherwise, HD2 from the operational amplifiers limits the useful frequency.

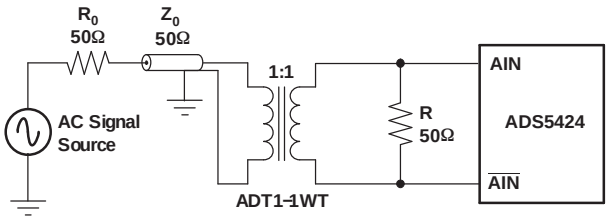

Figure 39. Converting a Single-Ended Input to a Differential Signal Using RF Transformers

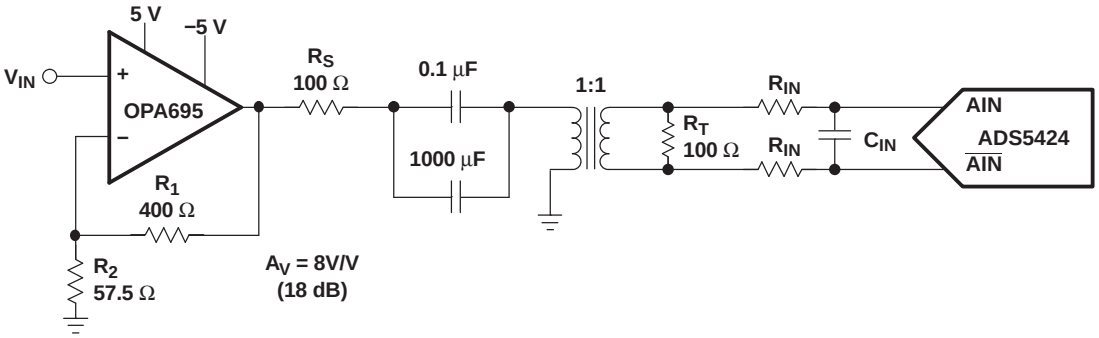

Figure 40. Using the OPA695 With the ADS5424

APPLICATION INFORMATION (continued)

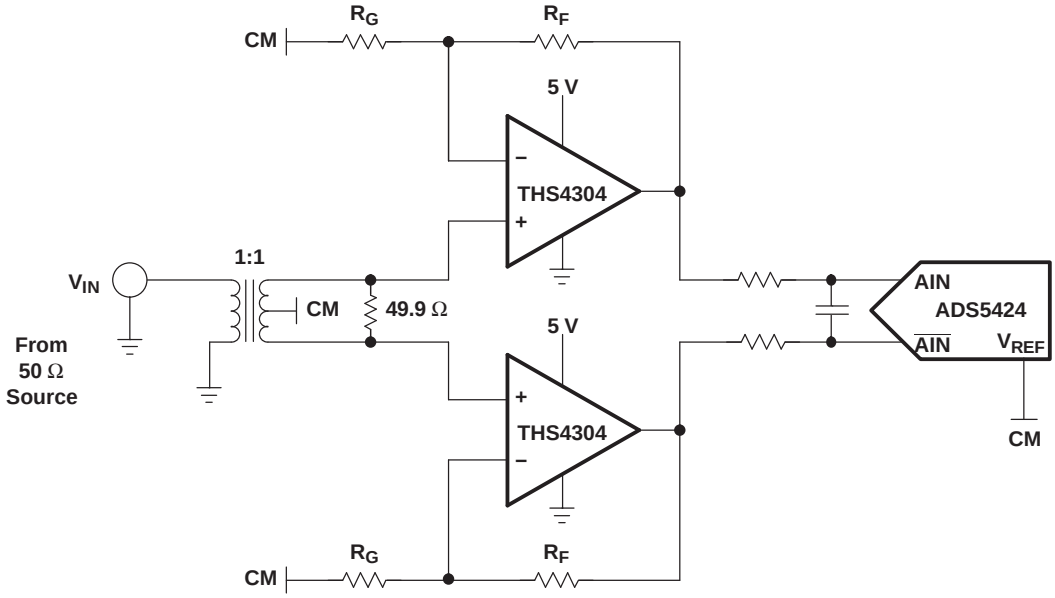

Figure 41. Using the THS4304 With the ADS5424

Besides these, TI offers a wide selection of single-ended operational amplifiers (including the THS3201, THS3202, and OPA847) that can be selected, depending on the application. An RF gain block amplifier, such as the TI THS9001, can also be used with an RF transformer for high input frequency applications. For applications requiring dc coupling with the signal source, instead of using a topology with three single-ended amplifiers, a differential input/differential output amplifier, such as the THS4509 (see Figure 42), can be used, which minimizes board space and reduce number of components.

Figure 43 shows their combined SNR and SFDR performance versus frequency, with –1-dBFS input signal level and sampling at 80 MSPS.

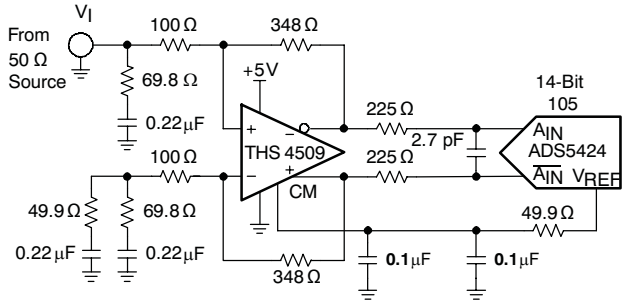

Figure 42. Using the THS4509 With the ADS5424

APPLICATION INFORMATION (continued)

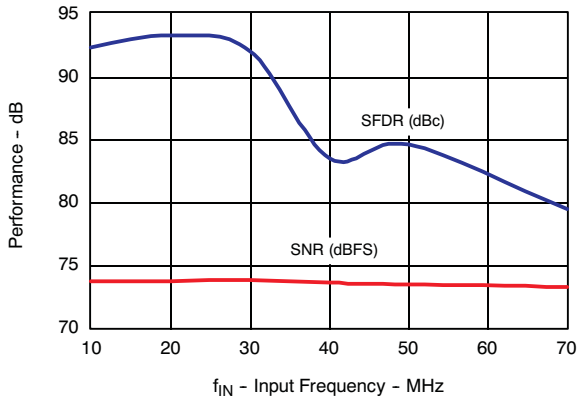

Figure 43. Performance vs Input Frequency for the THS4509 + ADS5424 Configuration

On this configuration, the THS4509 amplifier circuit provides 10 dB of gain, converts the single-ended input to differential, and sets the proper input common-mode voltage to the ADS5424.

The 225-Ω resistors and 2.7-pF capacitor between the THS4509 outputs and ADS5424 inputs (along with the input capacitance of the ADC) limit the bandwidth of the signal to about 100 MHz (–3 dB).

For this test, an Agilent signal generator is used for the signal source. The generator is an ac-coupled 50-Ω source. A band-pass filter is inserted in series with the input to reduce harmonics and noise from the signal source.

Input termination is accomplished via the 69.8-Ω resistor and 0.22-µF capacitor to ground, in conjunction with the input impedance of the amplifier circuit. A 0.22-µF capacitor and 49.9-Ω resistor is inserted to ground across the 69.8-Ω resistor and 0.22-µF capacitor on the alternate input to balance the circuit.

Gain is a function of the source impedance, termination, and 348-Ω feedback resistor. See the THS4509 data sheet for further component values to set proper 50-Ω termination for other common gains.

Since the ADS5424 recommended input common-mode voltage is 2.4 V, the THS4509 is operated from a single power-supply input with V_{S+} = 5 V and V_{S-} = 0 V (ground). This maintains maximum headroom on the internal transistors of the THS4509.

Clock Inputs

The ADS5424 clock input can be driven with either a differential clock signal or a single-ended clock input, with little or no difference in performance between both configurations. In low input frequency applications, where jitter may not be a big concern, the use of single-ended clock (see Figure 44) could save some cost and board space without any trade-off in performance. When driven on this configuration, it is best to connect CLKM (pin 11) to ground with a 0.01-µF capacitor, while CLKP is ac coupled with a 0.01-µF capacitor to the clock source (see Figure 45).

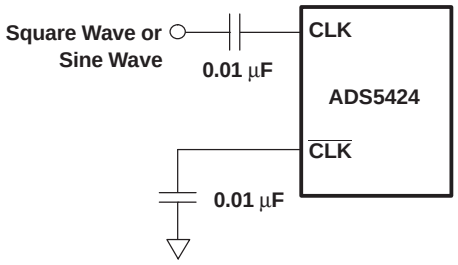

Figure 44. Single-Ended Clock

APPLICATION INFORMATION (continued)

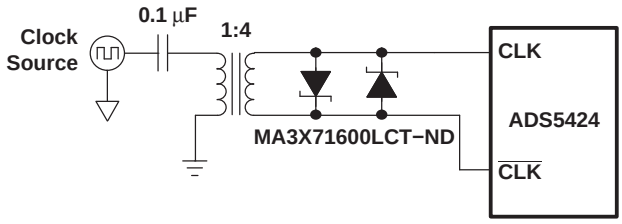

Figure 45. Differential Clock

Nevertheless, for jitter-sensitive applications, the use of a differential clock has some advantages (as with any other ADCs) at the system level. The first advantage is that it allows for common-mode noise rejection at the PCB level. A further analysis (see *Clocking High Speed Data Converters*, literature number SLYT075) reveals one more advantage. The following formula describes the different contributions to clock jitter:

$(\text{Jittertotal})^2 = (\text{EXT_jitter})^2 + (\text{ADC_jitter})^2 = (\text{EXT_jitter})^2 + (\text{ADC_int})^2 + (\text{K/clock_slope})^2$

The first term would represent the external jitter coming from the clock source, plus noise added by the system on the clock distribution, up to the ADC. The second term is the ADC contribution, which can be divided in two portions. The first does not depend directly on any external factor. The second contribution is a term inversely proportional to the clock slope. The faster the slope, the smaller this term will be. For example, compute the ADC jitter contribution from a sinusoidal input clock of 3-V_{PP} amplitude and F_S = 80 MSPS:

$\text{ADC_jitter} = \text{sqrt}\left((150\text{ fs})^2 + (5 \times 10^{-5}/(1.5 \times 2 \times \text{PI} \times 80 \times 10^6))^2\right) = 164\text{ fs}$

The use of differential clock allows for the use of bigger clock amplitudes without exceeding the absolute maximum ratings. This, in the case of sinusoidal clock, results in higher slew rates that minimize the impact of the jitter factor inversely proportional to the clock slope.

Figure 46 shows this approach. The back-to-back Schottky can be added to limit the clock amplitude in cases where this would exceed the absolute maximum ratings, even when using a differential clock. Figure 23 and Figure 24 show the performance versus input clock amplitude for a sinusoidal clock.

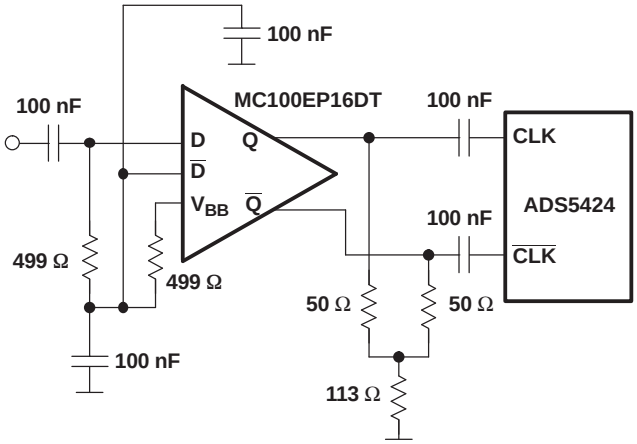

Figure 46. Differential Clock Using PECL Logic

Another possibility is the use of a logic-based clock as PECL. In this case, the slew rate of the edges most likely are much higher than the one obtained for the same clock amplitude based on a sinusoidal clock. This solution minimizes the effect of the slope-dependent ADC jitter. Nevertheless, observe that for the ADS5424, this term is small and has been optimized. Using logic gates to square a sinusoidal clock may not produce the best results, as logic gates may not have been optimized to act as comparators, adding too much jitter while squaring the inputs.

APPLICATION INFORMATION (continued)

The common-mode voltage of the clock inputs is set internally to 2.4 V using internal 1-kΩ resistors. It is recommended to use an ac coupling, but if for any reason this scheme is not possible due to, for instance, asynchronous clocking, the ADS5424 presents a good tolerance to clock common-mode variation (see Figure 21).

Additionally, the internal ADC core uses both edges of the clock for the conversion process. This means that, ideally, a 50% duty cycle should be provided. Figure 22 shows the performance variation of the ADC versus clock duty cycle.

Digital Outputs

The ADC provides 14 data outputs (D13–D0, with D13 being the MSB and D0 the LSB), a data-ready signal (DRY, pin 52), and an out-of-range indicator (OVR, pin 32) that equals 1 when the output reaches the full-scale limits.

The output format is twos complement. When the input voltage is at negative full scale (around –1.1-V differential), the output is, from MSB to LSB, 10 0000 0000 0000. Then, as the input voltage is increased, the output switches to 10 0000 0000 0001, 10 0000 0000 0010, and so on until 11 1111 1111 1111 right before mid-scale (when both inputs are tight together if we neglect offset errors). Further increases on input voltage outputs the word 00 0000 0000 0000, to be followed by 00 0000 0000 0001, 00 0000 0000 0010, and so on until reaching 01 1111 1111 1111 at full-scale input (1.1-V differential).

Although the output circuitry of the ADS5424 has been designed to minimize the noise produced by the transients of the data switching, care must be taken when designing the circuitry reading the ADS5424 outputs. Output load capacitance should be minimized by minimizing the load on the output traces, reducing their length and the number of gates connected to them, and by the use of a series resistor with each pin. Typical numbers on the data-sheet tables and graphs are obtained with 100-Ω series resistor on each digital output pin, followed by an SN74AVC16244 digital buffer like the one used in the evaluation board.

Power Supplies

The use of low-noise power supplies with adequate decoupling is recommended, being the linear supplies the first choice versus switched ones, which tend to generate more noise components that can be coupled to the ADS5424.

The ADS5424 uses two power supplies. For the analog portion of the design, a 5-V AV_{DD} is used, while for the digital outputs supply (DRV_{DD}), the use of 3.3 V is recommended. All the ground pins are marked as GND, although AGND pins and DRGND pins are not tied together inside the package. Customers willing to experiment with different grounding schemes should know that AGND pins are 4, 7, 10, 13, 15, 17, 19, 21, 23, 25, 27, and 29, while DRGND pins are 2, 34, and 42. Nevertheless, it is recommended that both grounds are tied together externally, using a common ground plane. That is the case on the production test boards and modules provided to customer for evaluation. In order to obtain the best performance, the user should layout the board to ensure that the digital return currents do not flow under the analog portion of the board. This can be achieved without the need to split the board and just with careful component placing and increasing the number of vias and ground planes.

Finally, notice that the metallic heatsink under the package is also connected to analog ground.

Layout Information

The evaluation board represents a good guideline of how to layout the board to obtain maximum performance from the ADS5424. General design rules, such as the use of multilayer boards, single ground plane for both analog and digital ADC ground connections, and local decoupling ceramic chip capacitors should be applied. The input traces should be isolated from any external source of interference or noise, including the digital outputs as well as the clock traces. Clock should also be isolated from other signals, particularly on applications where low jitter is required, as high IF sampling.

Besides performance-oriented rules, special care must be taken when considering the heat dissipation out of the device. The thermal heatsink (octagonal, with 2,5 mm on each side) should be soldered to the board, and provision for more than 16 ground vias should be made. The thermal package information describes the T_{JA} values obtained on the different configurations.

PACKAGING INFORMATION

Orderable Device	Status [1]	Package Type	Package Drawing	Pins	Package Qty	Eco Plan [2]	Lead/Ball Finish	MSL Peak Temp [3]
ADS5424MPJYEP	ACTIVE	QFP	PJY	52		TBD	Call TI	Call TI
ADS5424MPJYREP	ACTIVE	QFP	PJY	52		TBD	Call TI	Call TI
V62/06647-01XE	ACTIVE	QFP	PJY	52		TBD	Call TI	Call TI
V62/06647-02XE	ACTIVE	QFP	PJY	52		TBD	Call TI	Call TI

[1] The marketing status values are defined as follows:
ACTIVE: Product device recommended for new designs.
LIFEBUY: TI has announced that the device will be discontinued, and a lifetime-buy period is in effect.
NRND: Not recommended for new designs. Device is in production to support existing customers, but TI does not recommend using this part in a new design.
PREVIEW: Device has been announced but is not in production. Samples may or may not be available.
OBSOLETE: TI has discontinued the production of the device.

[2] Eco Plan - The planned eco-friendly classification: Pb-Free (RoHS), Pb-Free (RoHS Exempt), or Green (RoHS & no Sb/Br) - please check http://www.ti.com/productcontent for the latest availability information and additional product content details.
TBD: The Pb-Free/Green conversion plan has not been defined.
Pb-Free (RoHS): TI's terms "Lead-Free" or "Pb-Free" mean semiconductor products that are compatible with the current RoHS requirements for all 6 substances, including the requirement that lead not exceed 0.1% by weight in homogeneous materials. Where designed to be soldered at high temperatures, TI Pb-Free products are suitable for use in specified lead-free processes.
Pb-Free (RoHS Exempt): This component has a RoHS exemption for either 1) lead-based flip-chip solder bumps used between the die and package, or 2) lead-based die adhesive used between the die and leadframe. The component is otherwise considered Pb-Free (RoHS compatible) as defined above.
Green (RoHS & no Sb/Br): TI defines "Green" to mean Pb-Free (RoHS compatible), and free of Bromine (Br) and Antimony (Sb) based flame retardants (Br or Sb do not exceed 0.1% by weight in homogeneous material)

[3] MSL, Peak Temp. -- The Moisture Sensitivity Level rating according to the JEDEC industry standard classifications, and peak solder temperature.

Important Information and Disclaimer: The information provided on this page represents TI's knowledge and belief as of the date that it is provided. TI bases its knowledge and belief on information provided by third parties, and makes no representation or warranty as to the accuracy of such information. Efforts are underway to better integrate information from third parties. TI has taken and continues to take reasonable steps to provide representative and accurate information but may not have conducted destructive testing or chemical analysis on incoming materials and chemicals. TI and TI suppliers consider certain information to be proprietary, and thus CAS numbers and other limited information may not be available for release.

In no event shall TI's liability arising out of such information exceed the total purchase price of the TI part(s) at issue in this document sold by TI to Customer on an annual basis.

OTHER QUALIFIED VERSIONS OF ADS5424-EP :
- Catalog: ADS5424
- Space: ADS5424-SP

NOTE: Qualified Version Definitions:
- Catalog - TI's standard catalog product
- Space - Radiation tolerant, ceramic packaging and qualified for use in Space-based application

TAPE AND REEL INFORMATION

REEL DIMENSIONS

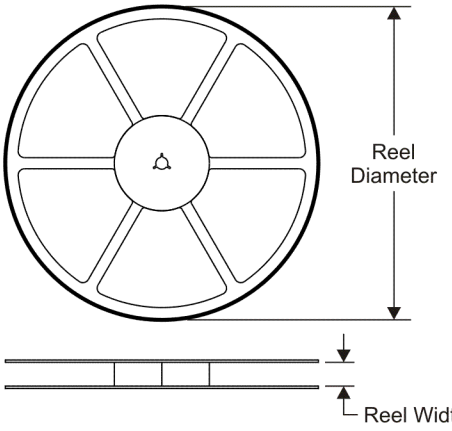

TAPE DIMENSIONS

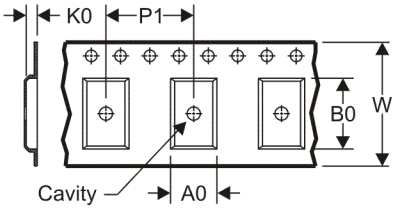

A0	Dimension designed to accommodate the component width
B0	Dimension designed to accommodate the component length
K0	Dimension designed to accommodate the component thickness
W	Overall width of the carrier tape
P1	Pitch between successive cavity centers

QUADRANT ASSIGNMENTS FOR PIN 1 ORIENTATION IN TAPE

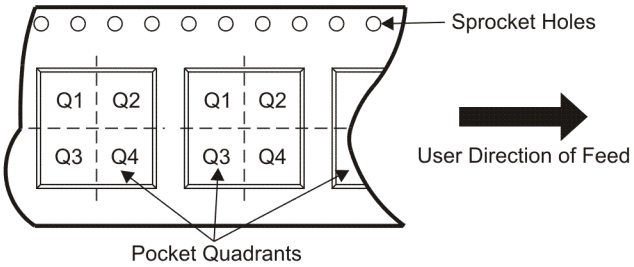

*All dimensions are nominal

Device	Package Type	Package Drawing	Pins	SPQ	Reel Diameter (mm)	Reel Width W1 (mm)	A0 (mm)	B0 (mm)	K0 (mm)	P1 (mm)	W (mm)	Pin1 Quadrant
ADS5424MPJYREP	QFP	PJY	52	0	330.0	24.4	12.3	12.3	2.5	16.0	24.0	Q2

TAPE AND REEL BOX DIMENSIONS

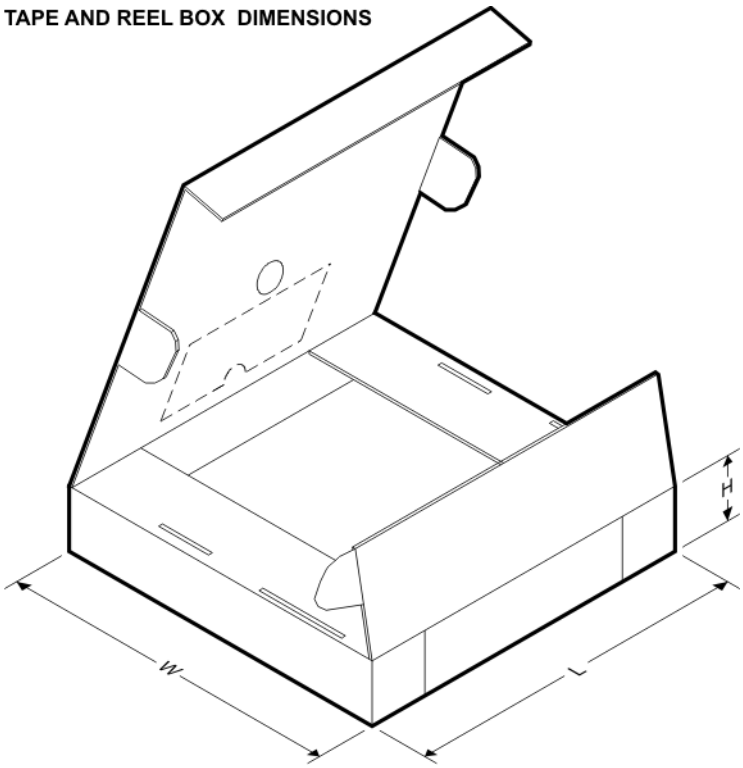

*All dimensions are nominal

Device	Package Type	Package Drawing	Pins	SPQ	Length (mm)	Width (mm)	Height (mm)
ADS5424MPJYREP	QFP	PJY	52	0	346.0	346.0	41.0

PJY (S–PQFP–G52) PLASTIC QUAD FLATPACK

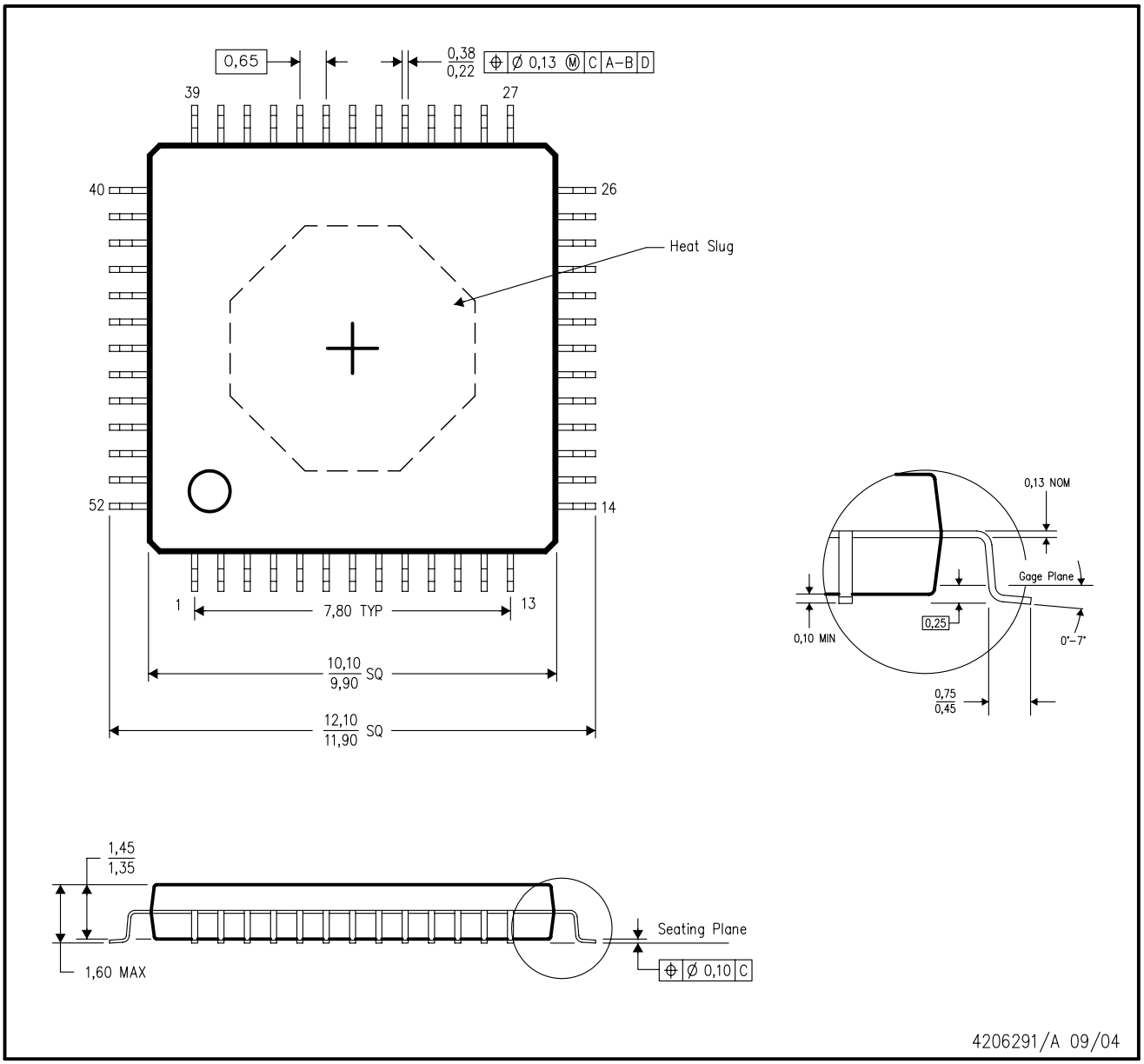

NOTES:
A. All linear dimensions are in millimeters.
B. This drawing is subject to change without notice.
C. Body dimensions do not include mold flash or protrusion.
D. This package is designed to be soldered to a thermal pad on the board. Refer to Technical Brief, PowerPad Thermally Enhanced Package, Texas Instruments Literature No. SLMA002 for information regarding recommended board layout. This document is available at www.ti.com.

THERMAL INFORMATION

This PowerQuad 4™ package incorporates an exposed thermal pad that is designed to be attached directly to an external heatsink. The thermal pad must be soldered directly to the printed circuit board (PCB). After soldering, the PCB can be used as a heatsink. In addition, through the use of thermal vias, the thermal pad can be attached directly to the appropriate copper plane shown in the electrical schematic for the device, or alternatively, can be attached to a special heatsink structure designed into the PCB. This design optimizes the heat transfer from the integrated circuit (IC).

For additional information on the PowerQuad 4 package and how to take advantage of its heat dissipating abilities, refer to Technical Brief, PowerPAD Thermally Enhanced Package, Texas Instruments Literature No. SLMA002 and Application Brief, PowerPAD Made Easy, Texas Instruments Literature No. SLMA004. Both documents are available at www.ti.com.

The exposed thermal pad dimensions for this package are shown in the following illustration.

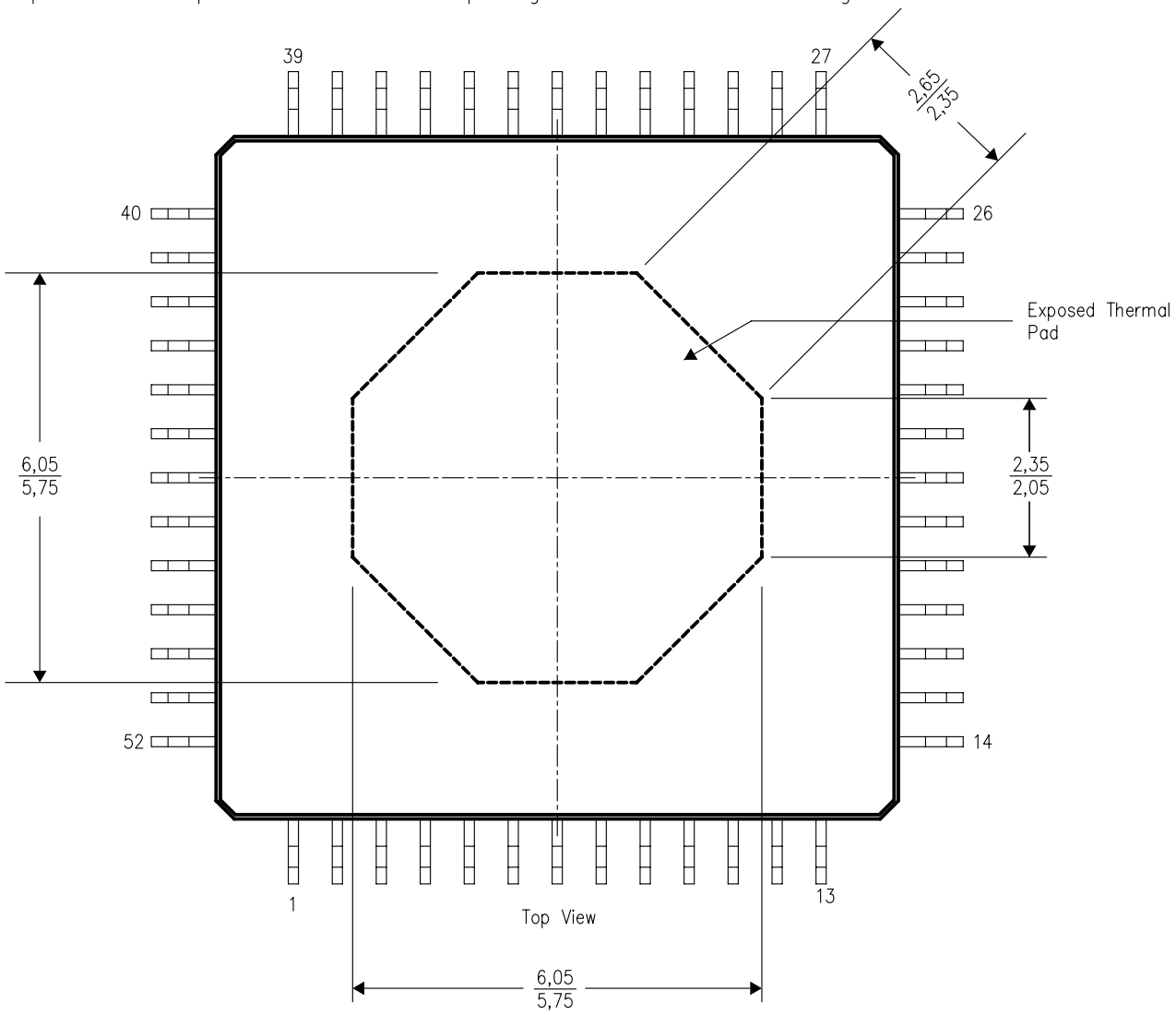

NOTE: All linear dimensions are in millimeters

Exposed Thermal Pad Dimensions

IMPORTANT NOTICE

Texas Instruments Incorporated and its subsidiaries (TI) reserve the right to make corrections, modifications, enhancements, improvements, and other changes to its products and services at any time and to discontinue any product or service without notice. Customers should obtain the latest relevant information before placing orders and should verify that such information is current and complete. All products are sold subject to TI's terms and conditions of sale supplied at the time of order acknowledgment.

TI warrants performance of its hardware products to the specifications applicable at the time of sale in accordance with TI's standard warranty. Testing and other quality control techniques are used to the extent TI deems necessary to support this warranty. Except where mandated by government requirements, testing of all parameters of each product is not necessarily performed.

TI assumes no liability for applications assistance or customer product design. Customers are responsible for their products and applications using TI components. To minimize the risks associated with customer products and applications, customers should provide adequate design and operating safeguards.

TI does not warrant or represent that any license, either express or implied, is granted under any TI patent right, copyright, mask work right, or other TI intellectual property right relating to any combination, machine, or process in which TI products or services are used. Information published by TI regarding third-party products or services does not constitute a license from TI to use such products or services or a warranty or endorsement thereof. Use of such information may require a license from a third party under the patents or other intellectual property of the third party, or a license from TI under the patents or other intellectual property of TI.

Reproduction of TI information in TI data books or data sheets is permissible only if reproduction is without alteration and is accompanied by all associated warranties, conditions, limitations, and notices. Reproduction of this information with alteration is an unfair and deceptive business practice. TI is not responsible or liable for such altered documentation. Information of third parties may be subject to additional restrictions.

Resale of TI products or services with statements different from or beyond the parameters stated by TI for that product or service voids all express and any implied warranties for the associated TI product or service and is an unfair and deceptive business practice. TI is not responsible or liable for any such statements.

TI products are not authorized for use in safety-critical applications (such as life support) where a failure of the TI product would reasonably be expected to cause severe personal injury or death, unless officers of the parties have executed an agreement specifically governing such use. Buyers represent that they have all necessary expertise in the safety and regulatory ramifications of their applications, and acknowledge and agree that they are solely responsible for all legal, regulatory and safety-related requirements concerning their products and any use of TI products in such safety-critical applications, notwithstanding any applications-related information or support that may be provided by TI. Further, Buyers must fully indemnify TI and its representatives against any damages arising out of the use of TI products in such safety-critical applications.

TI products are neither designed nor intended for use in military/aerospace applications or environments unless the TI products are specifically designated by TI as military-grade or "enhanced plastic." Only products designated by TI as military-grade meet military specifications. Buyers acknowledge and agree that any such use of TI products which TI has not designated as military-grade is solely at the Buyer's risk, and that they are solely responsible for compliance with all legal and regulatory requirements in connection with such use.

TI products are neither designed nor intended for use in automotive applications or environments unless the specific TI products are designated by TI as compliant with ISO/TS 16949 requirements. Buyers acknowledge and agree that, if they use any non-designated products in automotive applications, TI will not be responsible for any failure to meet such requirements.

Following are URLs where you can obtain information on other Texas Instruments products and application solutions:

Products		**Applications**	
Amplifiers	amplifier.ti.com	Audio	www.ti.com/audio
Data Converters	dataconverter.ti.com	Automotive	www.ti.com/automotive
DLP® Products	www.dlp.com	Broadband	www.ti.com/broadband
DSP	dsp.ti.com	Digital Control	www.ti.com/digitalcontrol
Clocks and Timers	www.ti.com/clocks	Medical	www.ti.com/medical
Interface	interface.ti.com	Military	www.ti.com/military
Logic	logic.ti.com	Optical Networking	www.ti.com/opticalnetwork
Power Mgmt	power.ti.com	Security	www.ti.com/security
Microcontrollers	microcontroller.ti.com	Telephony	www.ti.com/telephony
RFID	www.ti-rfid.com	Video & Imaging	www.ti.com/video
RF/IF and ZigBee® Solutions	www.ti.com/lprf	Wireless	www.ti.com/wireless

Mailing Address: Texas Instruments, Post Office Box 655303, Dallas, Texas 75265
Copyright © 2009, Texas Instruments Incorporated